Work Order ID 67055

Monday, March 07, 2011 8:09:58 AM

Item ID: D412-664-203 **Accept** **Setup Start** **Stop**

Revision ID:

Item Name: Crosstube Aft

Start Date: 3/7/2011 **Start Qty:** 1.00 **Cust Item ID:**

Required Date: 3/17/2011 **Req'd Qty:** 1.00 **Customer:**

Reference:

Approvals: **Process Plan:** _____ **Date:** _____ **Tooling:** _____ **Date:** _____ **Run Start** **Stop**

QC: _____ **Date:** _____ **SPC (Y/N):** _____ **Date:** _____

Draw Nbr	Revision Nbr
D412-664-243	E

Sequence ID/ Work Center ID	Operation Description	Set Up/ Run Hours	Tool ID	Tool #	Plan Code	Accept Qty	Reject Qty	Reject Number	Insp. Stamp
100	DOCUMENT CONTROL	0.00							
DC	**Memo**	0.00							
Document Control	Photocopy bluefile and create labels as per PPP D412-664-203 CHG 006								
110	Packaging	0.00							
Packaging	**Memo**	0.00							
Packaging									
120	BENDING MACHINE - CROSSTUBES	0.00							
CNC B[redacted]	**Memo**	0.00							
CNC A[redacted]	Bend tube as per Dwg D412-664-243 using CNC bender program 412-aft and Folio FT010								

BG 11-3-23

11/03/23

11-3-15

11-3-15

Dart Aerospace Ltd

W/O:		WORK ORDER CHANGES					
DATE	STEP	PROCEDURE CHANGE	By	Date	Qty	Approval Chief Eng / Prod Mgr	Approval QC Inspector

Part No: _____ **PAR #:** _____ **Fault Category:** _____ **NCR:** Yes No **DQA:** _____ **Date:** _____

Resolution: _____ **Disposition:** _____ **QA: N/C Closed:** _____ **Date:** _____

NCR:		WORK ORDER NON-CONFORMANCE (NCR)						
DATE	STEP	Description of NC Section A	Corrective Action Section B			Verification Section C	Approval Chief Eng	Approval QC Inspector
			Initial Chief Eng	Action Description Chief Eng	Sign & Date			

NOTE: Date & initial all entries

Work Order ID 67055

Monday, March 07, 2011 8:09:58 AM

Item ID: D412-664-203 **Accept** **Setup Start**

Revision ID: **Stop**

Item Name: Crosstube Aft

Start Date: 3/7/2011 **Start Qty:** 1.00 **Cust Item ID:**

Required Date: 3/17/2011 **Req'd Qty:** 1.00 **Customer:**

Reference:

Run Start

Approvals: **Process Plan:** _____ **Date:** _____ **Tooling:** _____ **Date:** _____

Stop

QC: _____ **Date:** _____ **SPC (Y/N):** _____ **Date:** _____

Sequence ID/ Work Center ID	Operation Description	Set Up/ Run Hours	Tool ID	Tool #	Plan Code	Accept Qty	Reject Qty	Reject Number	Insp. Stamp
130	QC15- Crosstube Dimensional Check	0.00							
QC	**Memo**	0.00							
Quality Control									
140		0.00							
Crosstubes	Crosstubes								
Crosstubes	**Memo**	0.00							

1-Drill pilot holes in tube as per Dwg D412-664-243 using drill Jig DT8550 & DT8551and drill table DT8577 using #9 holes as per QSI 10 to install towers.

2-Ream hole to finish size in tube as per Dwg D412-664-243using drill Jig DT8550 & DT8551.Check dimensions between holes, both sides on both cuffs, to ensure alignment with saddle holes.

3-SCRIBE PART # & BATCH #

4-Deburr & Inspect for surface damage. Repair damage within limits as per Dwg D412-664-243

[redacted]

11-3-17

Dart Aerospace Ltd

W/O:		WORK ORDER CHANGES					
DATE	STEP	PROCEDURE CHANGE	By	Date	Qty	Approval Chief Eng / Prod Mgr	Approval QC Inspector

Part No: _____ **PAR #:** _____ **Fault Category:** _____ **NCR:** Yes No **DQA:** _____ **Date:** _____

Resolution: _____ **Disposition:** _____ **QA: N/C Closed:** _____ **Date:** _____

NCR:		WORK ORDER NON-CONFORMANCE (NCR)						
DATE	STEP	Description of NC Section A	Corrective Action Section B			Verification Section C	Approval Chief Eng	Approval QC Inspector
			Initial Chief Eng	Action Description Chief Eng	Sign & Date			

NOTE: Date & initial all entries

Work Order ID 67055

Monday, March 07, 2011 8:09:58 AM

Item ID: D412-664-203 **Accept** **Setup Start**

Revision ID: **Stop**

Item Name: Crosstube Aft

Start Date: 3/7/2011 **Start Qty:** 1.00 **Cust Item ID:**

Required Date: 3/17/2011 **Req'd Qty:** 1.00 **Customer:**

Reference:

Run Start

Approvals: **Process Plan:** _____ **Date:** _____ **Tooling:** _____ **Date:** _____

Stop

QC: _____ **Date:** _____ **SPC (Y/N):** _____ **Date:** _____

Sequence ID/ Work Center ID	Operation Description	Set Up/ Run Hours	Tool ID	Tool #	Plan Code	Accept Qty	Reject Qty	Reject Number	Insp. Stamp
150	Crosstubes Chemical Conversion	0.00							
HandFXtube	**Memo**	0.00				11-3-17			
Hand Finishing Crosstubes									
160	QC3- Inspect Part Finish	0.00							
QC	**Memo**	0.00	8 w/03/18						
Quality Control									
170	QC5- Inspect part completeness to step on W/O	0.00							
QC	**Memo**	0.00	8 w/07/18						
Quality Control									

Dart Aerospace Ltd

W/O:		WORK ORDER CHANGES					
DATE	STEP	PROCEDURE CHANGE	By	Date	Qty	Approval Chief Eng / Prod Mgr	Approval QC Inspector

Part No: _____ **PAR #:** _____ **Fault Category:** _____ **NCR:** Yes No **DQA:** _____ **Date:** _____

Resolution: _____ **Disposition:** _____ **QA: N/C Closed:** _____ **Date:** _____

NCR:		WORK ORDER NON-CONFORMANCE (NCR)						
DATE	STEP	Description of NC Section A	Corrective Action Section B			Verification Section C	Approval Chief Eng	Approval QC Inspector
			Initial Chief Eng	Action Description Chief Eng	Sign & Date			

NOTE: Date & initial all entries

Work Order ID 67055

Monday, March 07, 2011 8:09:58 AM

Item ID: D412-664-203 **Accept** **Setup Start** **Stop**

Revision ID:

Item Name: Crosstube Aft

Start Date: 3/7/2011 **Start Qty:** 1.00 **Cust Item ID:**

Required Date: 3/17/2011 **Req'd Qty:** 1.00 **Customer:**

Reference:

Run Start **Stop**

Approvals: **Process Plan:** _____ **Date:** _____ **Tooling:** _____ **Date:** _____

QC: _____ **Date:** _____ **SPC (Y/N):** _____ **Date:** _____

Sequence ID/ Work Center ID	Operation Description	Set Up/ Run Hours	Tool ID	Tool #	Plan Code	Accept Qty	Reject Qty	Reject Number	Insp. Stamp
180	Outsource process - NDT per QSI038 4.1	0.00							
Outsource2	**Memo**	0.00				CL 11/03/18			①
Outsource process - NDT	Liquid Penetrant Inspection as per QSI 038Or Issue P/O: 13681 LPI as per ASTM 1417 Level 2 Attach copy of NDT results to work order								
190		0.00							
Packaging	Packaging								
Packaging	**Memo**	0.00				4/3/18			①
Packaging	Inspect for transit damage Ensure copy of NDT results attached to work order.								
200	QC5- Inspect part completeness to step on W/O	0.00							
QC	**Memo**	0.00				11	03	24	①
Quality Control	Inspect for damage & ensure results are as per Dwg D412-664-203								

Dart Aerospace Ltd

W/O:		WORK ORDER CHANGES					
DATE	STEP	PROCEDURE CHANGE	By	Date	Qty	Approval Chief Eng / Prod Mgr	Approval QC Inspector

Part No: _____ **PAR #:** _____ **Fault Category:** _____ **NCR:** Yes No **DQA:** _____ **Date:** _____

Resolution: _____ **Disposition:** _____ **QA: N/C Closed:** _____ **Date:** _____

NCR:		WORK ORDER NON-CONFORMANCE (NCR)						
DATE	STEP	Description of NC Section A	Corrective Action Section B			Verification Section C	Approval Chief Eng	Approval QC Inspector
			Initial Chief Eng	Action Description Chief Eng	Sign & Date			

NOTE: Date & initial all entries

Work Order ID 67055

Monday, March 07, 2011 8:09:58 AM

Item ID: D412-664-203 **Accept** **Setup Start**

Revision ID: **Stop**

Item Name: Crosstube Aft

Start Date: 3/7/2011 **Start Qty:** 1.00 **Cust Item ID:**

Required Date: 3/17/2011 **Req'd Qty:** 1.00 **Customer:**

Reference:

Run Start

Approvals: **Process Plan:** _____ **Date:** _____ **Tooling:** _____ **Date:** _____

Stop

QC: _____ **Date:** _____ **SPC (Y/N):** _____ **Date:** _____

Sequence ID/ Work Center ID	Operation Description	Set Up/ Run Hours	Tool ID	Tool #	Plan Code	Accept Qty	Reject Qty	Reject Number	Insp. Stamp
210	SprayPaint	0.00				WL	11	03	21 (1)
SprayPaint	**Memo**	0.00							
Spray Painting	1-Prime inside and outside crosstube as per QSI 005 4.2 2-Paint outside crosstube with White Imron as per QSI 005 4.2 PRIME: Start Time: 10:00 Fininsh Time: 11:00 PAINT: Start Time: 3:00 Finish Time: 4:30								
220	QC14- Inspect Spray Paint	0.00				AT	11	-03-22	(x1)
QC	**Memo**	0.00							
Quality Control	Then,Wrap in plastic bag to protect from scratches								

Dart Aerospace Ltd

W/O:		WORK ORDER CHANGES					
DATE	STEP	PROCEDURE CHANGE	By	Date	Qty	Approval Chief Eng / Prod Mgr	Approval QC Inspector

Part No: _____ **PAR #:** _____ **Fault Category:** _____ **NCR:** Yes No **DQA:** _____ **Date:** _____

Resolution: _____ **Disposition:** _____ **QA: N/C Closed:** _____ **Date:** _____

NCR:		WORK ORDER NON-CONFORMANCE (NCR)						
DATE	STEP	Description of NC Section A	Corrective Action Section B			Verification Section C	Approval Chief Eng	Approval QC Inspector
			Initial Chief Eng	Action Description Chief Eng	Sign & Date			

NOTE: Date & initial all entries

Work Order ID 67055

Monday, March 07, 2011 8:09:58 AM

Item ID: D412-664-203 **Accept** **Setup Start**

Revision ID: **Stop**

Item Name: Crosstube Aft

Start Date: 3/7/2011 **Start Qty:** 1.00 **Cust Item ID:**

Required Date: 3/17/2011 **Req'd Qty:** 1.00 **Customer:**

Reference:

Run Start

Approvals: **Process Plan:** _____ **Date:** _____ **Tooling:** _____ **Date:** _____

Stop

QC: _____ **Date:** _____ **SPC (Y/N):** _____ **Date:** _____

Sequence ID/ Work Center ID	Operation Description	Set Up/ Run Hours	Tool ID	Tool #	Plan Code	Accept Qty	Reject Qty	Reject Number	Insp. Stamp
230		0.00							
Crosstubes	Crosstubes								
	Memo	0.00							
Crosstubes	Assemble as per Dwg D412-664-203 1- Lightly scuff the bonded area using a 320 grit sand paper and clean the area with 41058 wash 'n' wipe 2-Install supports with magnobond as per QSI 015 Adhere for for 12 Hrs A/R 6398 Magnobond Batch: 116677 Expiry Date: 08/2011 3-Install clamps as per Dwg D212-664-203 using installaition jig DT9024 with 0.010 thick brass shims on both chafing sheild (D3189-1). Torque clamps to 80-100 in lb. 11·03·23						11	03	22
240	QC5- Inspect part completeness to step on W/O	0.00							
QC									
	Memo	0.00							
Quality Control									

[redacted]

Dart Aerospace Ltd

W/O:		WORK ORDER CHANGES					
DATE	STEP	PROCEDURE CHANGE	By	Date	Qty	Approval Chief Eng / Prod Mgr	Approval QC Inspector

Part No: _____ **PAR #:** _____ **Fault Category:** _____ **NCR:** Yes No **DQA:** _____ **Date:** _____

Resolution: _____ **Disposition:** _____ **QA: N/C Closed:** _____ **Date:** _____

NCR:		WORK ORDER NON-CONFORMANCE (NCR)						
DATE	STEP	Description of NC Section A	Corrective Action Section B			Verification Section C	Approval Chief Eng	Approval QC Inspector
			Initial Chief Eng	Action Description Chief Eng	Sign & Date			

NOTE: Date & initial all entries

Work Order ID 67055

Monday, March 07, 2011 8:09:58 AM

Item ID: D412-664-203 **Accept** **Setup Start**

Revision ID: **Stop**

Item Name: Crosstube Aft

Start Date: 3/7/2011 **Start Qty:** 1.00 **Cust Item ID:**

Required Date: 3/17/2011 **Req'd Qty:** 1.00 **Customer:**

Reference:

Run Start

Approvals: **Process Plan:** _____ **Date:** _____ **Tooling:** _____ **Date:** _____

Stop

QC: _____ **Date:** _____ **SPC (Y/N):** _____ **Date:** _____

Sequence ID/ Work Center ID	Operation Description	Set Up/ Run Hours	Tool ID	Tool #	Plan Code	Accept Qty	Reject Qty	Reject Number	Insp. Stamp
250	Pick Kit	0.00							
Packaging							4/3/23		
	Memo	0.00							
Packaging									
260	QC4- 100% Inspect kits for completeness	0.00							
QC		0.00 8/4/03/23							
	Memo								
Quality Control									
270		0.00							
Packaging	Packaging						4/3/23		
	Memo	0.00							
Packaging									

Identify and pack for shipping as per PPP D412-664-203
******Ensure tube is not packaged if curing time is less than 12 hrs, see step 27 for application time & date *******
Time & date of packaging: AK VHP
Location: _____

[redacted]

Dart Aerospace Ltd

W/O:		WORK ORDER CHANGES					
DATE	STEP	PROCEDURE CHANGE	By	Date	Qty	Approval Chief Eng / Prod Mgr	Approval QC Inspector

Part No: _____ **PAR #:** _____ **Fault Category:** _____ **NCR:** Yes No **DQA:** _____ **Date:** _____

Resolution: _____ **Disposition:** _____ **QA: N/C Closed:** _____ **Date:** _____

NCR:		WORK ORDER NON-CONFORMANCE (NCR)						
DATE	STEP	Description of NC Section A	Corrective Action Section B			Verification Section C	Approval Chief Eng	Approval QC Inspector
			Initial Chief Eng	Action Description Chief Eng	Sign & Date			

NOTE: Date & initial all entries

H:\FORMS\Quality Assurance\approved QA\NCRWO RevE

Work Order ID 67055

Monday, March 07, 2011 8:09:58 AM

Item ID: D412-664-203 **Accept** **Setup Start**

Revision ID: **Stop**

Item Name: Crosstube Aft

Start Date: 3/7/2011 **Start Qty:** 1.00 **Cust Item ID:**

Required Date: 3/17/2011 **Req'd Qty:** 1.00 **Customer:**

Reference:

Run Start

Approvals: **Process Plan:** _____ **Date:** _____ **Tooling:** _____ **Date:** _____

Stop

QC: _____ **Date:** _____ **SPC (Y/N):** _____ **Date:** _____

Sequence ID/ Work Center ID	Operation Description	Set Up/ Run Hours	Tool ID	Tool #	Plan Code	Accept Qty	Reject Qty	Reject Number	Insp. Stamp
280	QC21- Final Inspection - Work Order Release	0.00					11/3/23		
QC Quality Control	**Memo**	0.00					CL 11/03/23		

Dart Aerospace Ltd

W/O:		WORK ORDER CHANGES					
DATE	STEP	PROCEDURE CHANGE	By	Date	Qty	Approval Chief Eng / Prod Mgr	Approval QC Inspector

Part No: _____ **PAR #:** _____ **Fault Category:** _____ **NCR:** Yes No **DQA:** _____ **Date:** _____

Resolution: _____ **Disposition:** _____ **QA: N/C Closed:** _____ **Date:** _____

NCR:		WORK ORDER NON-CONFORMANCE (NCR)						
DATE	STEP	Description of NC Section A	Corrective Action Section B			Verification Section C	Approval Chief Eng	Approval QC Inspector
			Initial Chief Eng	Action Description Chief Eng	Sign & Date			

NOTE: Date & initial all entries

H:\fFORMS\Quality Assurance\approved QA\NCRWO RevE

Picklist Print

Monday, March 07, 2011 8:09:55 AM

4

Work Order ID: 67055

Parent Item: D412-664-203

Parent Item Name: Crosstube Aft

Start Date: 3/7/2011 **Required Date:** 3/17/2011

Start Qty: 1.00 **Required Qty:** 1.00

Comments:
IPP Rev:E□04.02.16□Reformat; Added D3189-1□K/DS
IPP Rev:F 06-03-29 Remove Coments on Pick List JLM□
IPP Rev:G 06.12.08 per ECN 886 EC
IPP Rev:H 07-04-30 As per Rev D JLM
IPP Rev:I 08-06-12 add comment in seq. 21 DD verified by:EC

Component Item ID/ Item Name	Replacement Item ID	Mfg/ Purch	Bin Item	Primary Location	Last Location	Route Seq ID	Unit of Measure	Qty on Hand	Qty per Kit	Total Qty	Qty Issued	Date Issued	Status
AN6-40A Bolt		Purchased	No			250	Each	75.0000	4	4			
				Location		**Loc Qty**		**Loc Code**					
				ST343		75							
					112828	1							
					115300	34				115300			
					115905	20							
					116549	20							
AN6-41A Bolt		Purchased	No			250	Each	36.0000	2	2			
				Location		**Loc Qty**		**Loc Code**					
				ST344		36							
					113288	6				113288			
					115316	30							
AN960JD616 Washer	NAS1149D0663J	Purchased	No			250	Each	0.0000	18	18 115596		4/3/12	

Dart Aerospace Ltd

W/O:		WORK ORDER CHANGES					
DATE	STEP	PROCEDURE CHANGE	By	Date	Qty	Approval Chief Eng / Prod Mgr	Approval QC Inspector

Part No: _____ PAR #: _____ Fault Category: _____ NCR: Yes No DQA: _____ Date: _____

Resolution: _____ Disposition: _____ QA: N/C Closed: _____ Date: _____

NCR:		WORK ORDER NON-CONFORMANCE (NCR)						
DATE	STEP	Description of NC Section A	Corrective Action Section B			Verification Section C	Approval Chief Eng	Approval QC Inspector
			Initial Chief Eng	Action Description Chief Eng	Sign & Date			

NOTE: Date & initial all entries

H:\FORMS\Quality Assurance\approved QA\NCRWO RevE

Picklist Print

Monday, March 07, 2011 8:09:55 AM

Work Order ID: 67055

Parent Item: D412-664-203

Parent Item Name: Crosstube Aft

Start Date: 3/7/2011 **Required Date:** 3/17/2011

Start Qty: 1.00 **Required Qty:** 1.00

D2856-600 Abrasion Strip	Manufactured	No		230	f	127.6331	1.76	1.76	11·03·22

Location	Loc Qty	Loc Code
ST	0.48	
37668	0.48	
ST403	127.1531	
25656	1.25	
26650	2.5	
37668	123.4031	

D2896-1 Support	Manufactured	No		230	Each	13.0000	1	1	11·03·22

Location	Loc Qty	Loc Code
LG	13	
47820	5	
58356	8	

D3189-1 Chafing Shield	Manufactured	No		230	Each	26.0000	2	2	11·03·22

Location	Loc Qty	Loc Code
FG	2	
36065	2	
LG	24	
58960	4	
63982	20	

Dart Aerospace Ltd

W/O:		WORK ORDER CHANGES					
DATE	STEP	PROCEDURE CHANGE	By	Date	Qty	Approval Chief Eng / Prod Mgr	Approval QC Inspector

Part No: _____ **PAR #:** _____ **Fault Category:** _____ **NCR:** Yes No **DQA:** _____ **Date:** _____

Resolution: _____ **Disposition:** _____ **QA: N/C Closed:** _____ **Date:** _____

NCR:		WORK ORDER NON-CONFORMANCE (NCR)						
DATE	STEP	Description of NC Section A	Corrective Action Section B			Verification Section C	Approval Chief Eng	Approval QC Inspector
			Initial Chief Eng	Action Description Chief Eng	Sign & Date			

NOTE: Date & initial all entries

Picklist Print

Monday, March 07, 2011 8:09:55 AM

Work Order ID: 67055

Parent Item: D412-664-203

Parent Item Name: Crosstube Aft

Start Date: 3/7/2011 **Required Date:** 3/17/2011

Start Qty: 1.00 **Required Qty:** 1.00

D3595-063-570	Manufactured	No	230	Each	56.0000	2	2	11-03-22
RUBBER CUSHION								

Location	Loc Qty	Loc Code
FG	4	
37971	4	
LG	52	
42243	31	
63406	21	

D412-664-203TRN	Manufactured	No	110	Each	2.0000	1	1	DP 11-3-14
Crosstube Turning Detail								

Location	Loc Qty	Loc Code
LG 67118	2	1
64740	1	
64742	1	

S MS21042L6	Purchased	No	250	Each	247.0000	6	6	4/13/23
Nut								

Location	Loc Qty	Loc Code
ST300	247	
111578	4	
116102	43	
116373	100	116373
116548	100	

Dart Aerospace Ltd

W/O:		WORK ORDER CHANGES					
DATE	STEP	PROCEDURE CHANGE	By	Date	Qty	Approval Chief Eng / Prod Mgr	Approval QC Inspector

Part No: _____ **PAR #:** _____ **Fault Category:** _____ **NCR:** Yes No **DQA:** _____ **Date:** _____

Resolution: _____ **Disposition:** _____ **QA: N/C Closed:** _____ **Date:** _____

NCR:		WORK ORDER NON-CONFORMANCE (NCR)						
DATE	STEP	Description of NC Section A	Corrective Action Section B			Verification Section C	Approval Chief Eng	Approval QC Inspector
			Initial Chief Eng	Action Description Chief Eng	Sign & Date			

NOTE: Date & initial all entries

Picklist Print

Monday, March 07, 2011 8:09:56 AM

Work Order ID: 67055

Parent Item: D412-664-203

Parent Item Name: Crosstube Aft

Start Date: 3/7/2011 **Required Date:** 3/17/2011

Start Qty: 1.00 **Required Qty:** 1.00

MS21920-28 Clamp(per MIL-DTL-8783C)	Purchased	No	230	Each	98.0000	4	4	11-03-22

Location	Loc Qty	Loc Code
FG	5	
105884	5	
LG	93	
114749	6	
116039	36	
116839	51	

MS21920-30 clamp(per MIL-DTL-8783C)	Purchased	No	230	Each	98.0000	2	2	11-03-22

Location	Loc Qty	Loc Code
LG	98	
109181	36	
111258	50	
112772	12	

Dart Aerospace Ltd

W/O:		WORK ORDER CHANGES					
DATE	STEP	PROCEDURE CHANGE	By	Date	Qty	Approval Chief Eng / Prod Mgr	Approval QC Inspector

Part No: _____ **PAR #:** _____ **Fault Category:** _____ **NCR:** Yes No **DQA:** _____ **Date:** _____

Resolution: _____ **Disposition:** _____ **QA: N/C Closed:** _____ **Date:** _____

NCR:		WORK ORDER NON-CONFORMANCE (NCR)						
DATE	STEP	Description of NC Section A	Corrective Action Section B			Verification Section C	Approval Chief Eng	Approval QC Inspector
			Initial Chief Eng	Action Description Chief Eng	Sign & Date			

NOTE: Date & initial all entries

DART AEROSPACE LTD	Work Order:	67055
Description: Crosstube High Aft (412)	**Part Number:**	**D412-664-203**
Inspection Dwg: D412-664-243 **Rev:** E		**Page 1 of 1**

Required Dimension	Min	Max
Height	24.24	24.50
1/2 Span	53.59	53.85
Angle	49	52
Total Span	107.18	107.70

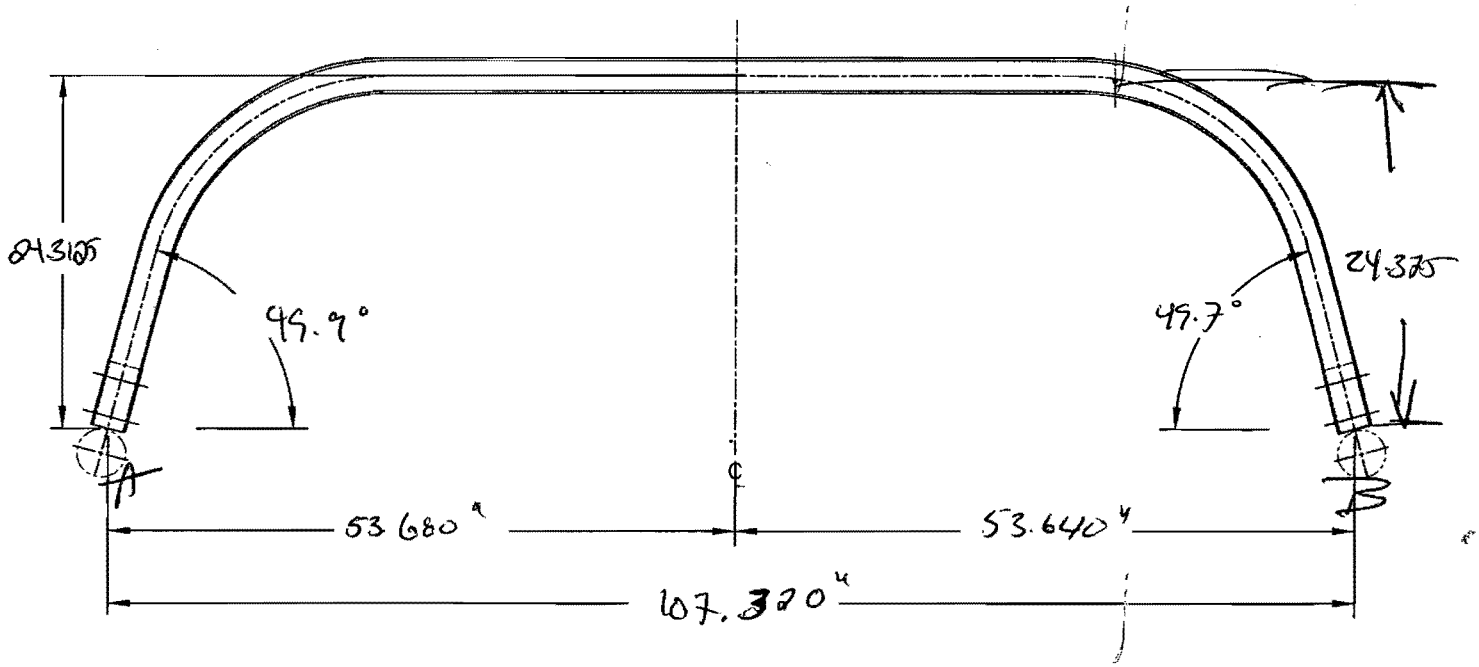

Comments

QC15 Inspection	
Date	11/03/15

Rev	Date	Change	Revised by	Approved
A	07.02.06	New Issue	KJ/JM	
B	07.05.08	Dimensions updated per Dwg rev. D	KJ/JLM	
C	10.02.02	Dwg Rev updated	KJ	

53.680
53.640
107.320

Item	Qty -243	Part Number	Description
1	X	D412-664-243	CROSSTUBE ASSEMBLY (412 HIGH AFT)
2	1	D6009-129	CROSSTUBE
3	2	D3595-063-570	RUBBER CUSHION
4	1	D2896-1	SUPPORT
5	2	D3189-1	CHAFING SHIELD
6	2	D2856-600-1009	ABRASION STRIP
7	4	MS21920-28	CLAMP
8	2	MS21920-30	CLAMP (OR MS21920-32)
9	A/R	MAGNOBOND 6398	ROCKWELL SPECIFICATION RBO-120-023 ADHESIVE (TEXTRON/BELL SPEC. 299-947-100, TYPE II, CLASS 2 ADHESIVE)

GENERAL NOTES:

1) MATERIAL: MANUFACTURED FROM D6009-129
   FINISHED LENGTH = 124.100±0.020 (BEFORE BENDING/TRIMMING)
2) FINISH: CHEMICAL CONVERSION COAT PER DART QSI 005 4.1
   PRIME INSIDE AND OUTSIDE PER DART QSI 005 4.2
   PAINT OUTSIDE PER DART QSI 005 4.2
3) TOLERANCES ARE PER DART QSI 018 UNLESS OTHERWISE NOTED.
4) UNITS: INCHES UNLESS OTHERWISE NOTED.
5) BREAK SHARP EDGES: 0.005 TO 0.010 MAX.
6) IDENTIFICATION: SCRIBE DART PART NUMBER "D412-664-243" AND BATCH NUMBER ON INSIDE OF CUFF USING VIBRATING STYLUS.
7) WEIGHT: 47.0 lbs (PER IIN-D212-664)
8) PART IS SYMMETRIC ABOUT CENTERLINE.
9) RUN CUTTER OFF PART. BLEND OUT EDGE LONGITUDINALY, TRANSITION SHOULD BE SMOOTH.
10) BEND PROGRESSIVELY WITH A MINIMUM OF 8 PASSES. MAXIMUM TUBE FLATTENING DUE TO BENDING IS 6% BASED ON O.D.
11) LIQUID PENETRANT INSPECT OUTSIDE SURFACE OF CROSSTUBE PER QSI 038.
12) INSTALL D2896-1 SUPPORT USING 0.03" TO 0.06" THICK LAYER OF MAGNOBOND 6398 TO THE SURFACE OF D2896-1 THAT WILL BE IN CONTACT WITH THE CROSSTUBE PER QSI 015. LET CURE FOR 12 HOURS AFTER INSTALLATION AND PRIOR TO PACKAGING.
13) INSTALL MS21920-30 CLAMPS (OR -32) WITH D3595-063-570 RUBBER CUSHIONS TO SECURE THE D2896-1 SUPPORT ON TOP SIDE OF THE CROSSTUBE. ENSURE CLAMPS ARE OPPOSITE OF CROSSTUBE SUPPORT.
14) INSTALL D2856-600-1009 ABRASION STRIPS WITH A 0.13 REF GAP ON BOTTOM SIDE OF CROSSTUBE PER QSI 035.
15) EXTREME CARE MUST BE TAKEN TO PROTECT THE OUTSIDE SURFACE OF THE TUBE. THE OUTSIDE SURFACE MUST BE SMOOTH AND FREE FROM SURFACE DEFECTS SUCH AS SCRATCHES, NICKS, OR DENTS. DEFECTS UP TO 0.005" MAY BE BLENDED OUT LONGITUDINALLY. CIRCUMFERENTIAL GRIND MARKS ARE UNACCEPTABLE.
16) TORQUE CLAMPS 80 TO 100 IN-LB. ENSURE AT LEAST 1.5 THREADS SHOWING IN SAFETY AND THAT NUT HAS NOT BOTTOMED-OUT AFTER TORQUING.

67055

RELEASED
2009 -10- 29

REV.	DESCRIPTION	BY	DATE
E	REFORMAT/REVISE GENERAL NOTES; REORGANIZED VIEWS AND REFORMATTED DRAWING TO CURRENT STANDARDS; RELOCATED FLAG #6 PER PAR 08-046 (ZN A6-3); ADD TOLERANCE (ZN B6-3, C4-3, C8-3 & C5-3); MOVED TURNING DETAIL & UPDATED TOLERANCE TO SHEET 4.	RF	09.09.30
D	REMOVE D2732-058, CHANGE TO D3595-063-570	PH	07.03.09
C	REMOVE D2856-600-1087, ADD D2732-058 & MAGNOBOND 6398, MS21920-32 WAS MS21920-30	MB	06.10.27
B	ADD HOLES FOR COMPATABILITY WITH BHT/AA SKIDTUBES	PH	05.02.04
A	NEW ISSUE	PH	01.10.17

DESIGN	PH	DART AEROSPACE LTD HAWKESBURY, ONTARIO, CANADA	
DRAWN	RF		
CHECKED		DRAWING NO.	REV. E
MFG. APPR.		D412-664-243	SHEET 1 OF 4
APPROVED		TITLE	SCALE
DE APPR.		CROSSTUBE ASSEMBLY (412 HI AFT)	NTS
DATE	09.09.30		

COPYRIGHT © 2001 BY DART AEROSPACE LTD
THIS DOCUMENT IS PRIVATE AND CONFIDENTIAL AND IS SUPPLIED ON THE EXPRESS CONDITION THAT IT IS NOT TO BE USED FOR ANY PURPOSE OR COPIED OR COMMUNICATED TO ANY OTHER PERSON WITHOUT WRITTEN PERMISSION FROM DART AEROSPACE LTD.

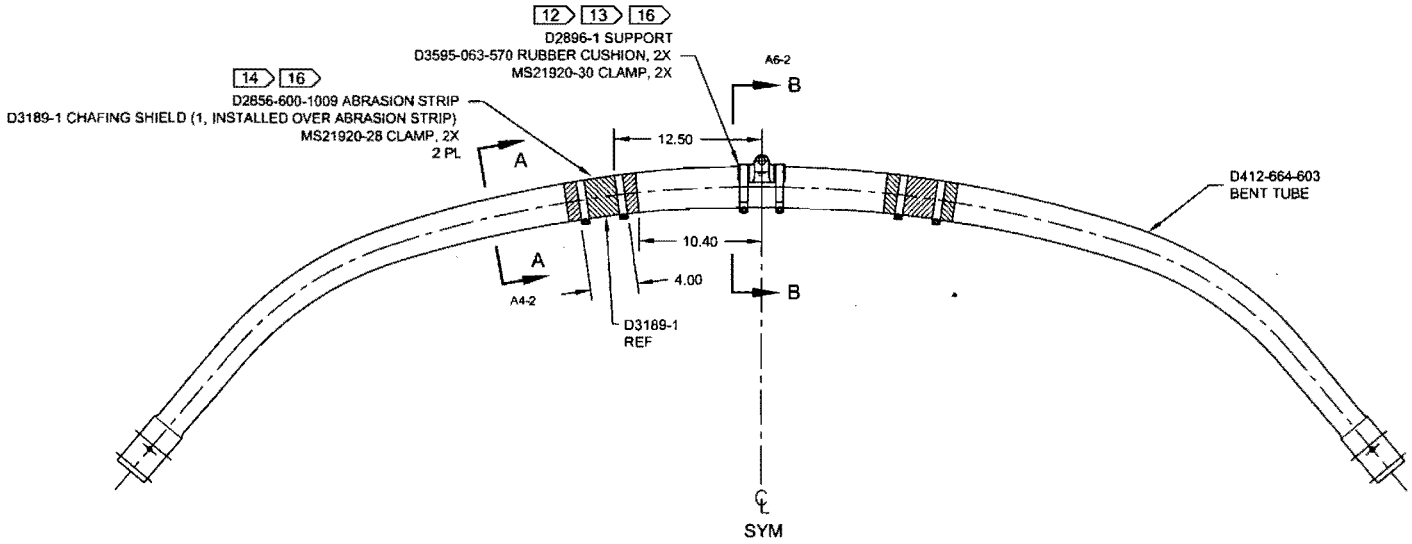

D212-664-243
ASSEMBLY DETAIL E

67055

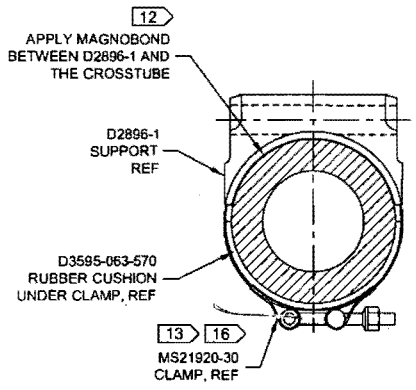

SECTION B-B D4-2
SCALE 4X

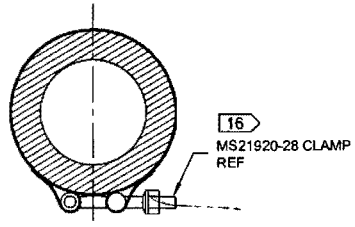

SECTION A-A C6-2
SCALE 4X

RELEASED
2009 -10- 29

DESIGN	PH	**DART AEROSPACE LTD** HAWKESBURY, ONTARIO, CANADA
DRAWN	RF	
CHECKED		DRAWING NO. REV. E
MFG. APPR.		D412-664-243 SHEET 2 OF 4
APPROVED		TITLE SCALE
DE APPR.		CROSSTUBE ASSEMBLY (412 HI AFT) NTS
DATE	09.09.30	

COPYRIGHT © 2001 BY DART AEROSPACE LTD
THIS DOCUMENT IS PRIVATE AND CONFIDENTIAL AND IS SUPPLIED ON THE EXPRESS CONDITION THAT IT IS NOT TO BE USED FOR ANY PURPOSE OR COPIED OR COMMUNICATED TO ANY OTHER PERSON WITHOUT WRITTEN PERMISSION FROM DART AEROSPACE LTD.

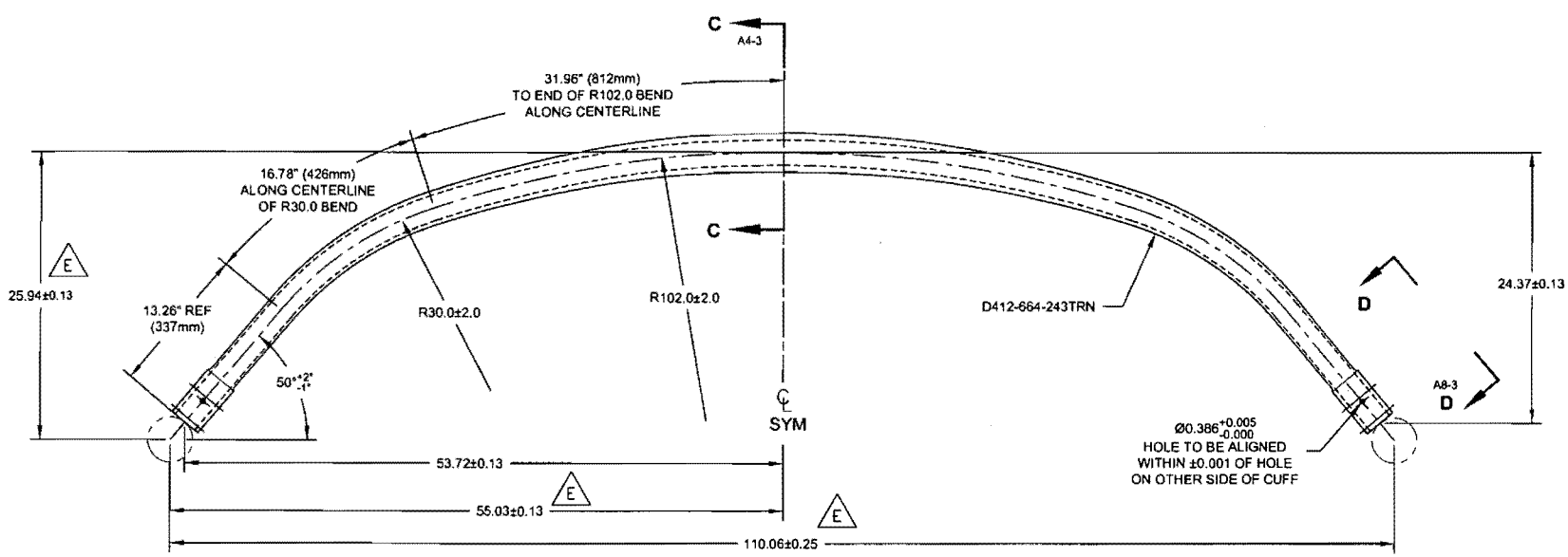

D412-664-603 10
BENDING AND DRILLING DETAIL E

67055

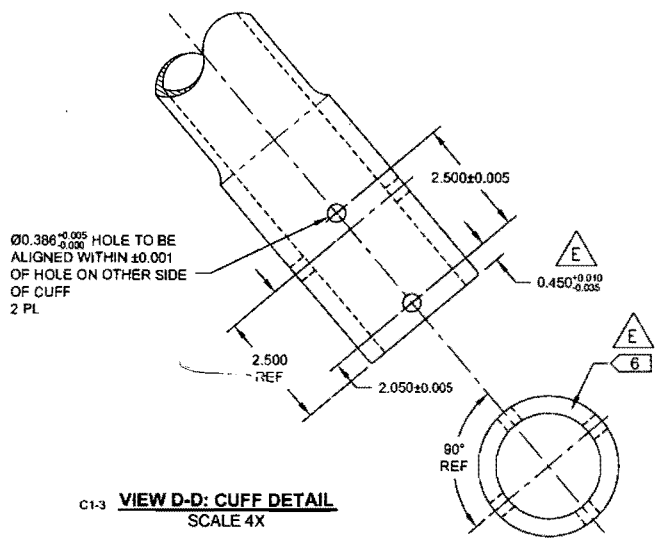

C1-3 **VIEW D-D: CUFF DETAIL**
SCALE 4X

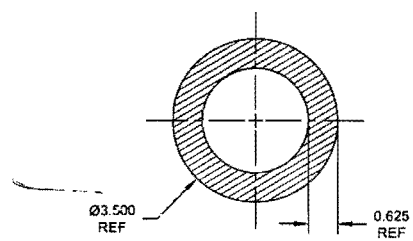

SECTION C-C D5-3
SCALE 4X

RELEASED
2009 -10- 29
MP

DESIGN	PH	**DART AEROSPACE LTD** HAWKESBURY, ONTARIO, CANADA
DRAWN	RF	
CHECKED		DRAWING NO. REV. E
MFG. APPR.		D412-664-243 SHEET 3 OF 4
APPROVED		TITLE SCALE
DE APPR.		CROSSTUBE ASSEMBLY (412 HI AFT) NTS
DATE	09.09.30	

COPYRIGHT © 2001 BY DART AEROSPACE LTD
THIS DOCUMENT IS PRIVATE AND CONFIDENTIAL AND IS SUPPLIED ON THE EXPRESS CONDITION THAT IT IS NOT TO BE USED FOR ANY PURPOSE OR COPIED OR COMMUNICATED TO ANY OTHER PERSON WITHOUT WRITTEN PERMISSION FROM DART AEROSPACE LTD.

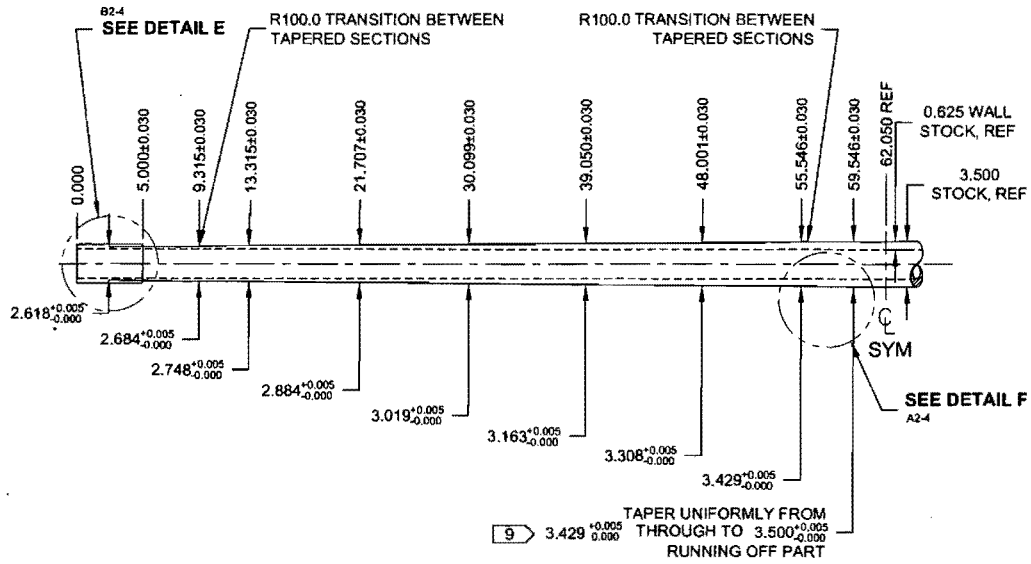

D412-664-243TRN TURNING DETAIL E

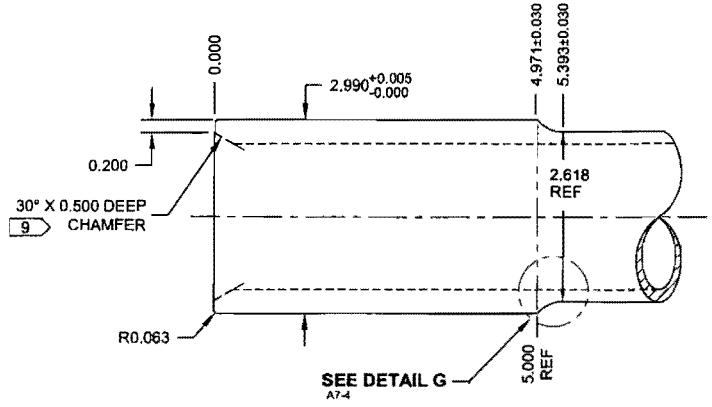

DETAIL E: CROSSTUBE CUFF D8-4
SCALE 5X

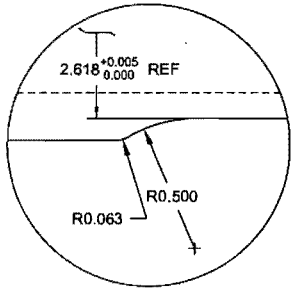

DETAIL G: CUFF TRANSITION C2-4
SCALE 10X

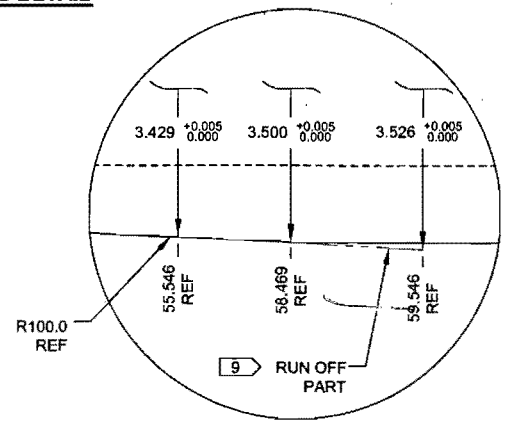

DETAIL F: TAPER RUN-OFF C4-4
NOT TO SCALE

67855

RELEASED
2009 -10- 29

DESIGN	RH	DART AEROSPACE LTD HAWKESBURY, ONTARIO, CANADA	
DRAWN	RF		
CHECKED		DRAWING NO.	REV. E
MFG. APPR.		D412-664-243	SHEET 4 OF 4
APPROVED		TITLE	SCALE
DE APPR.		CROSSTUBE ASSEMBLY (412 HI AFT)	NTS
DATE	09.09.30		

COPYRIGHT © 2001 BY DART AEROSPACE LTD
THIS DOCUMENT IS PRIVATE AND CONFIDENTIAL AND IS SUPPLIED ON THE EXPRESS CONDITION THAT IT IS NOT TO BE USED FOR ANY PURPOSE OR COPIED OR COMMUNICATED TO ANY OTHER PERSON WITHOUT WRITTEN PERMISSION FROM DART AEROSPACE LTD.

ACUREN

LIQUID PENETRANT TEST REPORT

P- 12230

PAGE 1 OF 1

CLIENT	DART AEROSPACE	DATE	MARCH 18-2011 TIME AM ☑ PM ☐
ATTENTION	LINDA LACELLE	ACUREN JOB NO.	185-11-02057
ADDRESS	1270 ABERDEEN ST. HAWKESBURY, ON. K6A 1K7	PO/WO NO.	13681 —
		WORK LOCATION	HAWKESBURY
		ACCEPTANCE STD.	ASTM 1417/QSI-038 REV./DATE 2005
PROJECT	F.P.I. ON CROSS TUBES		
ITEM(S) EXAMINED	(4)		

JOB DESCRIPTION PROCEDURE NO. LT-0002 REV./DATE 2008. TECHNIQUE NO. LT-TECH 2 REV./DATE 2008.

PART NO. — MATERIAL ALUDINE ALUMINUM THICKNESS VARIOUS

SCOPE WET FLUORESCENT LIQUID PENETRANT INSPECTION CARRIED OUT 100% EXTERNAL SURFACE.

TEST DETAILS

METHOD	☑ FLUORESCENT ☐ VISIBLE	☑ WATER WASH ☐ SOLVENT REMOVABLE ☐ POST EMULSIFIED	
FAMILY BRAND	MAGNAFLUX	BLACK LIGHT S/N 1649	☑ OUTPUT > 1000 μW/CM² ☐ AMBIENT < 2 fc
PENETRANT	ZL67 MINIMUM DWELL TIME 45/10 MIN.	LIGHTING EQUIP. ☐ FLASHLIGHT ☐ TROUBLELIGHT	☐ OUTPUT>100 fc @ SURFACE
PENETRANT REMOVER	H20 MINIMUM DRY TIME >10 MIN.	OTHER LABINO	
DEVELOPER	SKD 52 MINIMUM DWELL TIME 10 MIN.	LIGHT METER S/N 1098866	CAL DUE DATE OCT-14 2011
DEVELOPER TYPE	☑ NON AQUEOUS ☐ AQUEOUS ☐ DRY		

TEST SURFACE

SURFACE CONDITION	☐ AS GROUND	☐ AS WELDED	☐ MACHINED	☐ SHOT BLASTED	☑ CLEAN BARE METAL
SURFACE TEMPERATURE	☐ < - 4°C/ 20°F	☐ - 4°C/ 20°F TO 10°C/50°F		☑ 10°C/50°F TO 52°C/125°F	☐ > 52°C/125°F

RESULTS- (☐ METRIC ☑ IMPERIAL)

1 CROSS TUBE: W.O. 67057 ✓

1 CROSS TUBE: W.O. 67058 ✓

1 CROSS TUBE: W.O. 67055 ✓

1 CROSS TUBE: W.O. 67056 ✓

11.03.21

Scope of Services

The agreement of Acuren Group Inc. to perform services extends only to those services provided for in writing. Under no circumstances shall such services extend beyond the performance of the requested services. It is expressly understood that all descriptions, comments and expressions of opinion reflect the opinions or observations of Acuren Group Inc. based on information and assumptions supplied by the owner/operator and are not intended nor can they be construed as representations or warranties. Acuren Group Inc. is not assuming any responsibilities of the owner/operator and the owner/operator retains complete responsibility for the engineering, manufacture, repair and use decisions as a result of the data or other information provided by Acuren Group Inc. In no event shall Acuren Group Inc.'s liability in respect of the services referred to herein exceed the amount paid for such services.

Standard of Care

In performing the services provided, Acuren Group Inc. uses the degree, care and skill ordinarily exercised under similar circumstances by others performing such services in the same or similar locality. No other warranty, expressed or implied, is made or intended by Acuren Group Inc.

SIGNATURES

CLIENT REPRESENTATIVE	Ian Titley (PRINT)	(SIGNATURE)	DTR # E-63247
TECHNICIAN (SIGNATURE):			REPORT REVIEWED BY:
NAME (PRINT):	MIKE JOHNSTON (1ST TECHNICIAN)	(2ND TECHNICIAN)	NAME / INITIALS
	CGSB LEVEL II SNT LEVEL	CGSB LEVEL SNT LEVEL	
	CGSB REG. NO 6606	CGSB REG. NO	

WHITE – CLIENT COPY CANARY – OFFICE COPY PINK – TECHNICIAN COPY GOLD – OFFICE COPY